California Faucets®

Steampunk Bay™

WALL MOUNT TUB FILLER WITH HANDSHOWER

8608W-ETW.20
8608W-ETW.18
8608B-ETW.20
8608B-ETW.18
8608-ETW.20
8608-ETW.18

Features

- *All brass construction*
- *Over 28 finishes including 13 PVD finishes*
- *Tub filler Maximum flow rate: 15 gpm (58.6 L/min) at 60 psi*
- *Handshower flow rate: 2.0 gpm (7.6L/min) or 1.8 gpm (6.8 L/min)*
- *1/4 turn ceramic disc cartridges*
- *Replace .FR with desired max flow rate:*
  8608X-ETW.20 for 2.0 gpm
  8608X-ETW.18 for 1.8 gpm

Codes/Standards

Product meets or exceeds the following:

- *ASME A112.18.1/CSA B125.1*
- *CEC (1.8 gpm) / DOE (2.0 & 1.8 gpm)*
- *Commonwealth of MA*
- *EPA WaterSense (2.0 gpm)*
- *ADA compliant (with lever handles)*
- *Local codes may require installation of an upstream tempering valve*

8608B-ETW.18 SHOWN

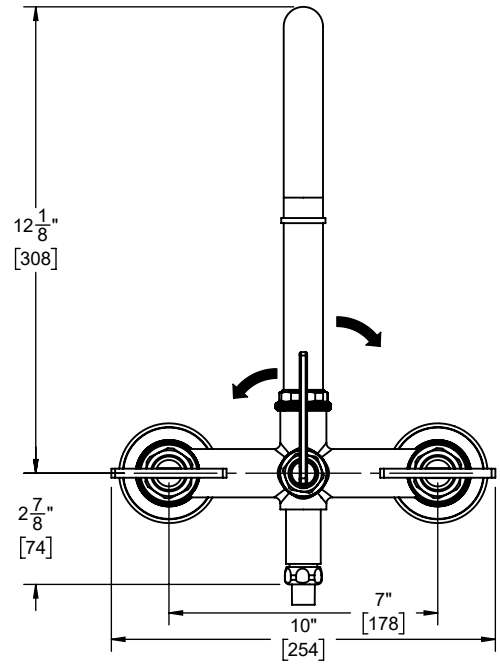

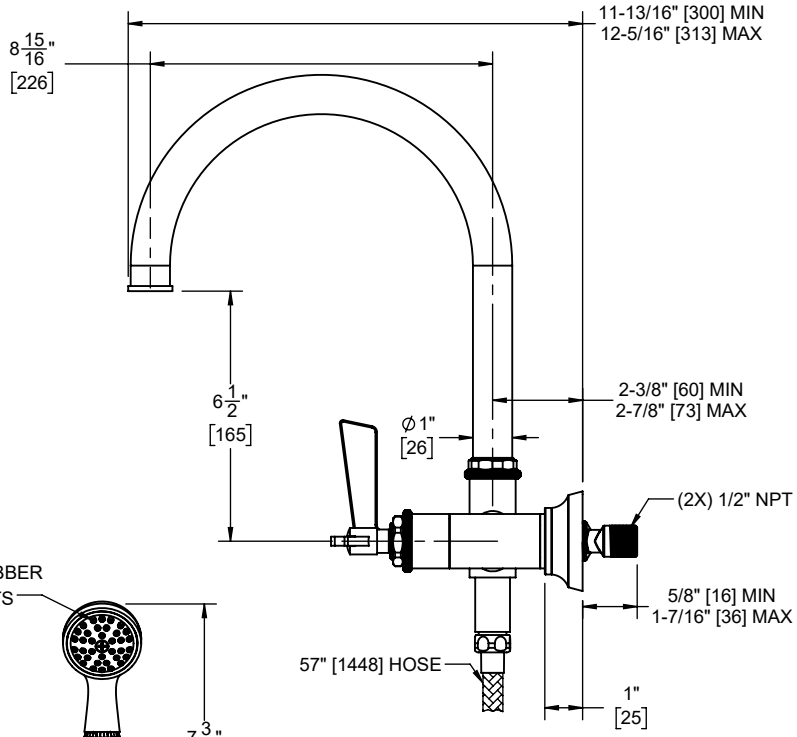

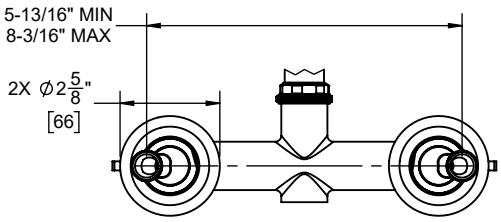

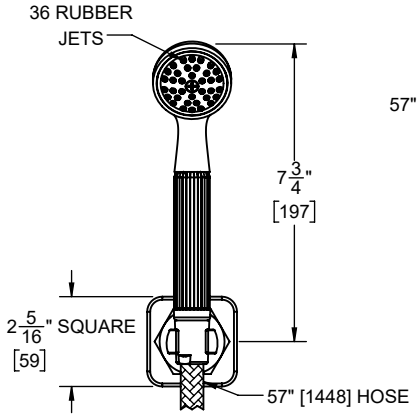

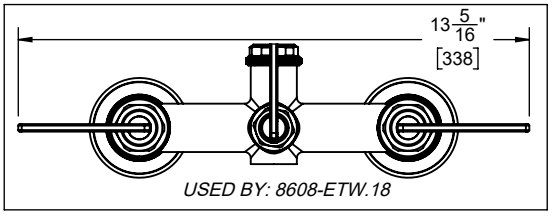

USED BY: 8608-ETW.18

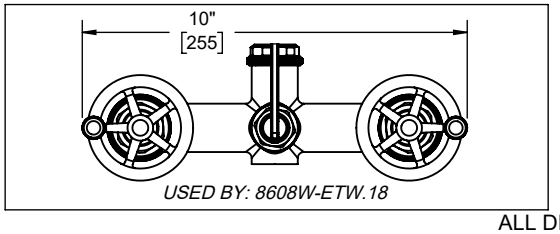

USED BY: 8608W-ETW.18

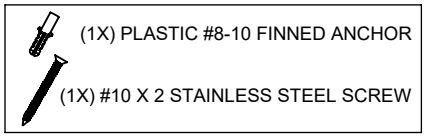

THROUGH-HOLE SPECIFICATIONS

MIN	RECOMMENDED	MAX
Ø1-13/16" [46]	Ø1-7/8" [48]	Ø2" [51]

ALL DIMENSIONS SHOWN TO NEAREST 1/16"
[ALL DIMENSIONS SHOWN TO NEAREST 1MM]

SPECIFICATIONS SUBJECT TO CHANGE WITHOUT NOTICE